ITEM #

MODEL #

NAME #

SIS #

AIA #

Modular Cooking Range Line EVO900 Two Wells Electric Fryer 23 liter

392338 (Z9KKGDBAMEA) 23+23-lt electric fryer with 2 "V" shaped wells (external heating elements) and 4 half size baskets - free standing

Short Form Specification

Item No.

High efficiency external infrared heating elements (36kW) with innovative deflectors attached to the outside of the wells. Deep drawn V-Shaped wells. Oil drains through a tap into a container positioned under the wells. Height adjustable feet in stainless steel. Exterior panels in stainless steel. Worktop in 20/10, stainless steel. Right-angled side edges eliminate gaps and possible dirt traps between units.

APPROVAL:

Main Features

- Deep drawn V-Shaped wells.
- Interior of wells with seamlessly laser-welded corners for ease of cleaning.
- External infrared heating elements with innovative deflectors applied to the well for ease of cleaning of the internal well and safe operations.
- Thermostatic regulation of oil temperature up to a maximum of 185 °C.
- Overheat protection thermostat as standard on all units.
- All major compartments located in front of unit for ease of maintenance.
- The special design of the control panel offers a better guarantee against oil infiltration.
- Supplied as standard with 4 half size baskets and 1 right and left side doors for cupboard.
- Optional portable oil quality monitoring tool (code 9B8081) for efficient oil management.

Construction

- All exterior panels in Stainless Steel with Scotch Brite finishing.
- Model has right-angled side edges to allow flush fitting joints between units, eliminating gaps and possible dirt traps.
- Unit is 900mm deep to give a larger working surface area.
- Unit delivered with four 50 mm legs in stainless steel as standard.
- IPX5 water resistance certification.

Sustainability

- This model is compliant with Swiss Energy Efficiency Ordinance (730.02).

Included Accessories

- 2 of DOOR FOR OPEN BASE CUPBOARD PNC 206350
- 2 of 2 half size baskets for 18/23lt well fryers PNC 927223

Optional Accessories

- OIL FILTER S/S FOR 23 LT FRYERS PNC 200086 ❑
- Junction sealing kit PNC 206086 ❑
- 4 wheels, 2 swivelling with brake (EVO700/900). It is mandatory to install with base supports for feet/wheels. PNC 206135 ❑
- Flanged feet kit PNC 206136 ❑
- Pair of side kicking strips PNC 206180 ❑
- Hygienic lid for 23lt fryers PNC 206201 ❑
- Frontal kicking strip for 23lt fryers in two parts PNC 206203 ❑
- Extension pipe for oil drainage for 15lt, 18lt, 23lt fryers PNC 206209 ❑
- Chimney upstand, 800 mm PNC 206304 ❑
- Base support for wheels (lateral) for 23lt fryers and pastacookers and refrigerated bases (900) PNC 206372 ❑
- Chimney grid net, 400mm PNC 206400 ❑
- SEDIMENT TRAY FOR 23LT FRYER PNC 921023 ❑
- 2 half size baskets for 18/23lt well fryers PNC 927223 ❑
- 1 full size basket for 18/23lt well fryers PNC 927226 ❑
- Unclogging rod for 23lt fryers drainage pipe PNC 927227 ❑
- Deflector for floured products for the 23lt fryer PNC 960645 ❑

The company reserves the right to make modifications to the products without prior notice. All information correct at time of printing.

Modular Cooking Range Line EVO900 Two Wells Electric Fryer 23 liter

Front

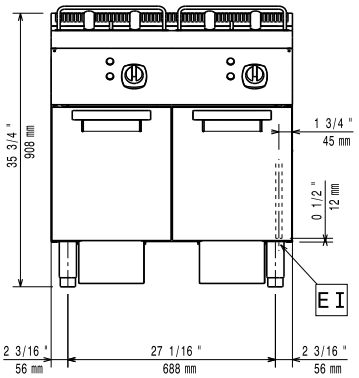

Side

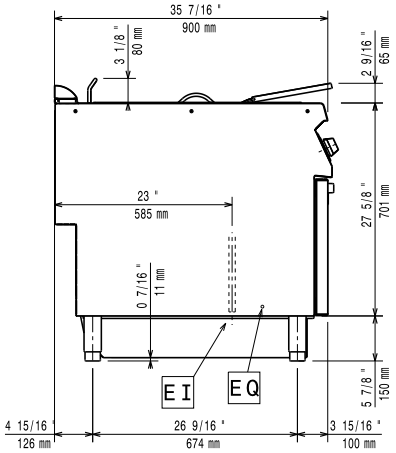

EI = Electrical inlet (power)
EQ = Equipotential screw

Top

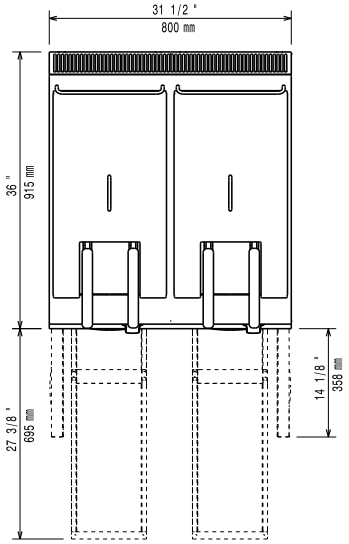

Electric

Supply voltage:	380-400 V/3N ph/50-60 Hz
Total Watts:	36 kW

Key Information:

If appliance is set up or next to or against temperature sensitive furniture or similar, a safety gap of approximately 150 mm should be maintained or some form of heat insulation fitted.

Usable well dimensions (width):	340 mm
Usable well dimensions (height):	575 mm
Usable well dimensions (depth):	400 mm
Well capacity:	21 lt MIN; 23 lt MAX
Performance*:	75 kg\hr
Thermostat Range:	105 °C MIN; 185 °C MAX
Net weight:	115 kg
Shipping weight:	125 kg
Shipping height:	1080 mm
Shipping width:	1020 mm
Shipping depth:	860 mm
Shipping volume:	0.95 m³
***Based on:**	Inspired by ASTM F1361, ensuring max productivity
[NOT TRANSLATED]	EFE92M23

The company reserves the right to make modifications to the products without prior notice. All information correct at time of printing.

2026.03.04